NOTES

1. THE DEPTH OF THE INLET SHALL BE AS REQUIRED TO SATISFY PROPOSED GRADES & SPECIFICATIONS. FINISH GRADES SHALL BE PROVIDED ON STORM DRAIN PLANS, ONE AT EACH END OF THE INLET AND INVERT GRADES FOR EACH PIPE. THE EDGE OF THE CONCRETE THROAT % GRADE IN ALL CASES SHALL MATCH AND BE FLUSH WITH THE LONGITUDINAL % GRADE OF THE ADJACENT STREET SURFACE.
2. THE INLET SUBGRADE, BEDDING, AND BACKFILL SHALL BE IN ACCORDANCE WITH PLATE SD–011. SUBGRADE EXCAVATIONS SHALL BE TO FIRM UNDISTURBED SOIL.
3. PRECAST INLET STRUCTURES & TOP SLABS SUBMITTED AND APPROVED BY THE CITY ENGINEER MAY BE USED.
4. THE FLOOR SLAB IF CAST IN PLACE SHALL BE CONCRETE 8" THICK WITH NO. 4 REINFORCING STEEL AT 6" O.C.E.W. WITH 2" COVER AS SHOWN. NO. 4 "L" BARS SHALL BE INSTALLED AS SHOWN.
5. THE INLET WALLS SHALL BE DOUBLE BRICK WALL WITH 1/2" PARGING ON EXTERIOR FACES OR 8" CONCRETE WITH NO. 4 REINFORCING STEEL AT 6" O.C.E.W. WITH 2" COVER TO THE INSIDE FACE AS SHOWN. CONSTRUCT 4" TOP SLAB AS SHOWN, ALSO REFER TO PLATE SD–010.
6. WHEN THIS INLET IS IN A SUMP THE UPHILL THROAT & TRANSITION SHALL BE CONSTRUCTED AT BOTH ENDS.
7. WHEN THIS INLET IS IN A SUMP CONSTRUCT THE UNDERDRAIN DEVICE OF PLATE SD–045, INSTALLING THE REQUIRED 8" KNOCKOUTS. IF THE INLET IS ON A GRADE CONSTRUCT THE DRAINAGE DEVICE ONLY IF DIRECTED.
8. ALSO REFER TO PLATE SD–012 FOR LADDER RUNGS, AND PLATE SD–013 FOR FLOW CHANNELS AND BENCHES.

DESIGNATION	"T"–THROAT OPENING	NO. OF PIPE SUPPORTS
A – 5	5' – 0"	NONE
A – 10	10' – 0"	1
A – 15	15' – 0"	2
A – 20	20' – 0"	3

SUPPORTS TO BE SPACED 5'–0" O.C.

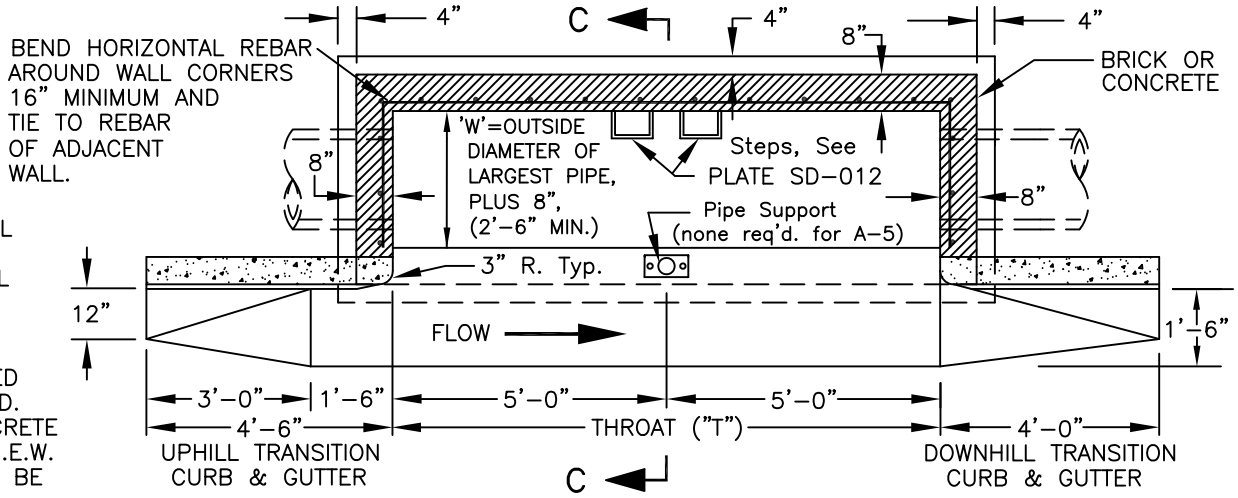

'A–10' INLET PLAN – TOP SLAB REMOVED

NO SCALE

ALL CURB & GUTTER SHOWN ABOVE SHALL BE MONOLITHIC WITH THE THROAT AND INCIDENTAL TO THE INLET CONSTRUCTION

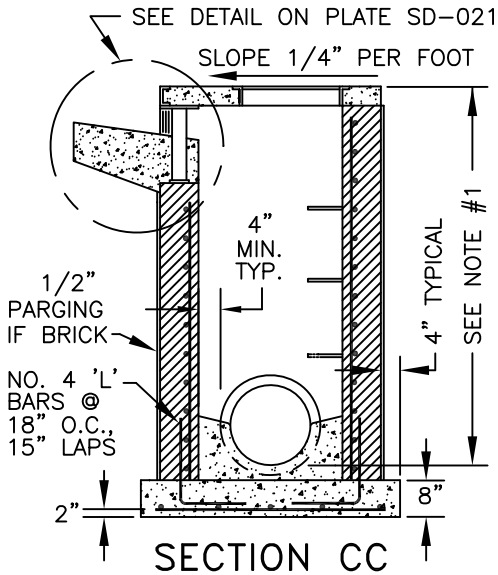

SECTION CC

NO SCALE

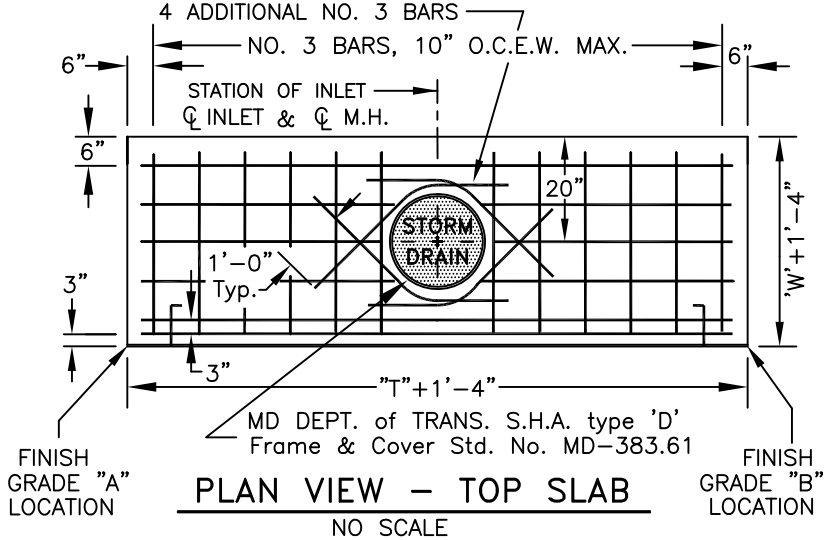

PLAN VIEW – TOP SLAB

NO SCALE

CITY OF HAGERSTOWN, MARYLAND – ENGINEERING AND INSPECTIONS DEPARTMENT

STORM DRAIN STANDARD DETAIL
TYPE "A" CURB OPENING INLET

ISSUE DATE: 01–01–03	
REVISIONS	
01–01–07	_____
_____	_____

Plate SD-020

© CITY OF HAGERSTOWN, MD, 2007