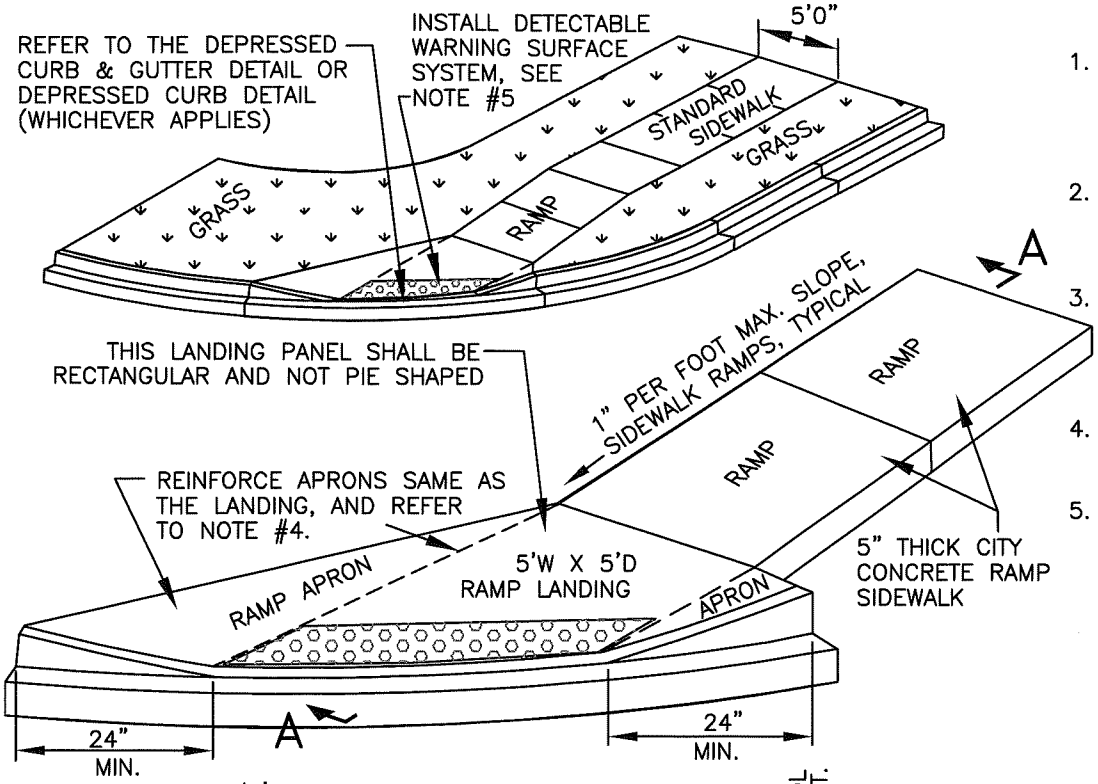

NOTES

1. THE LOCATION OF THE TYPE 2 SIDEWALK RAMP SHALL BE DETERMINED BY CURRENT A.D.A. REQUIREMENTS, EXISTING OBSTRUCTIONS, CROSSWALK LOCATION, THE SIDEWALK ALIGNMENT, AND SHALL BE APPROVED BY THE CITY ENGINEER BEFORE CONSTRUCTION BEGINS.
2. THE EDGE OF THE CONCRETE RAMP APRONS SHALL START AT THE BEGINNING OF THE TRANSITION CURB AND EXTEND TO THE END OF THE 6" CONCRETE RAMP. APRONS SHALL BE 6" THICK CONCRETE REINFORCED THE SAME AS THE RAMP.
3. ALL CONCRETE SHALL BE MD DEPT. OF TRANS. S.H.A. MIX NO. 3 WITH A 28 DAY COMPRESSIVE STRENGTH OF 3,500 P.S.I., WITH 5%–8% AIR AND 2"–5" SLUMP. DO NOT ADD WATER TO THE SURFACE FOR FINISHING. ALL EXPOSED SURFACES SHALL RECEIVE A LIGHT TRANSVERSE BROOM FINNISH.
4. REFER TO PLATE T–050 FOR STANDARD CONCRETE SIDEWALK, PLATE T–040 FOR STANDARD CONCRETE CURB & GUTTER, AND PLATE T–042 FOR CONCRETE REPLACEMENT (RETROFIT) CURB.
5. THE HEXAGON HATCHED AREA REPRESENTS A DETECTABLE WARNING SURFACE AT THE REQUIRED LOCATION AND ORIENTATION. REFER TO PLATE T–059 FOR THE DETECTABLE WARNING SURFACE SYSTEM SPECIFICATIONS, DETAILS, AND NOTES.

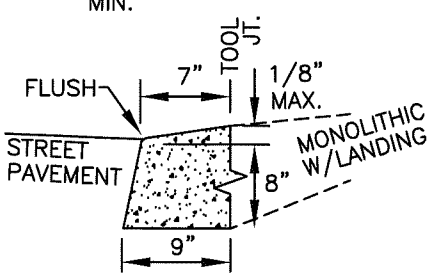

DEPRESSED CURB RAMP

SEE NOTE NO. 4

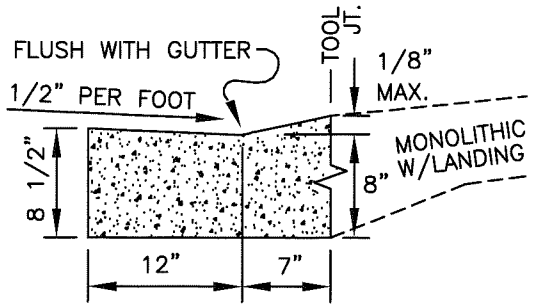

DEPRESSED CURB & GUTTER RAMP

SEE NOTE NO. 4

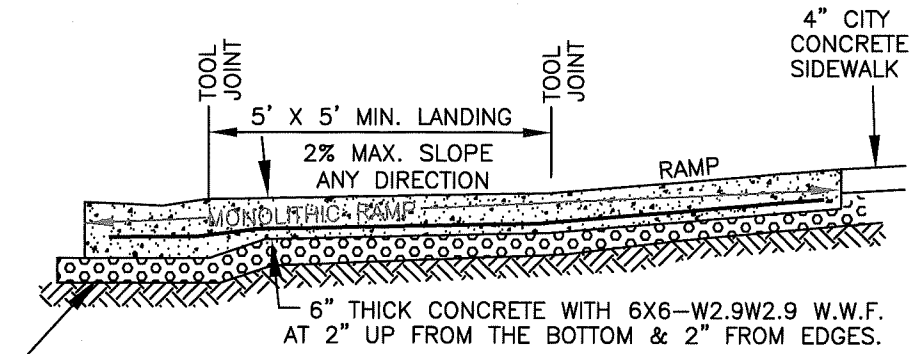

6" MIN. DEPTH MD DEPT. OF TRANS. S.H.A. GRADED AGGREGATE–BASE COMPACTED TO 95% OF THE MAXIMUM DRY DENSITY OF THE MODIFIED PROCTOR (ASTM D1557–78, OR AASHTO T–180) WITH AN IN PLACE MOISTURE CONTENT OF ±2% OF THE OPTIMUM MOISTURE CONTENT, ON TOP OF COMPACTED SUBGRADE.

SECTION AA

SEE NOTE NO. 4

CITY OF HAGERSTOWN, MARYLAND – ENGINEERING DIVISION

TRANSPORTATION STANDARD DETAIL
SIDEWALK RAMP TYPE 2

ISSUE DATE: 01–25–2024	
REVISIONS	
01–02–2025	----
----	-----

Plate T-054

© CITY OF HAGERSTOWN, MD, 2018